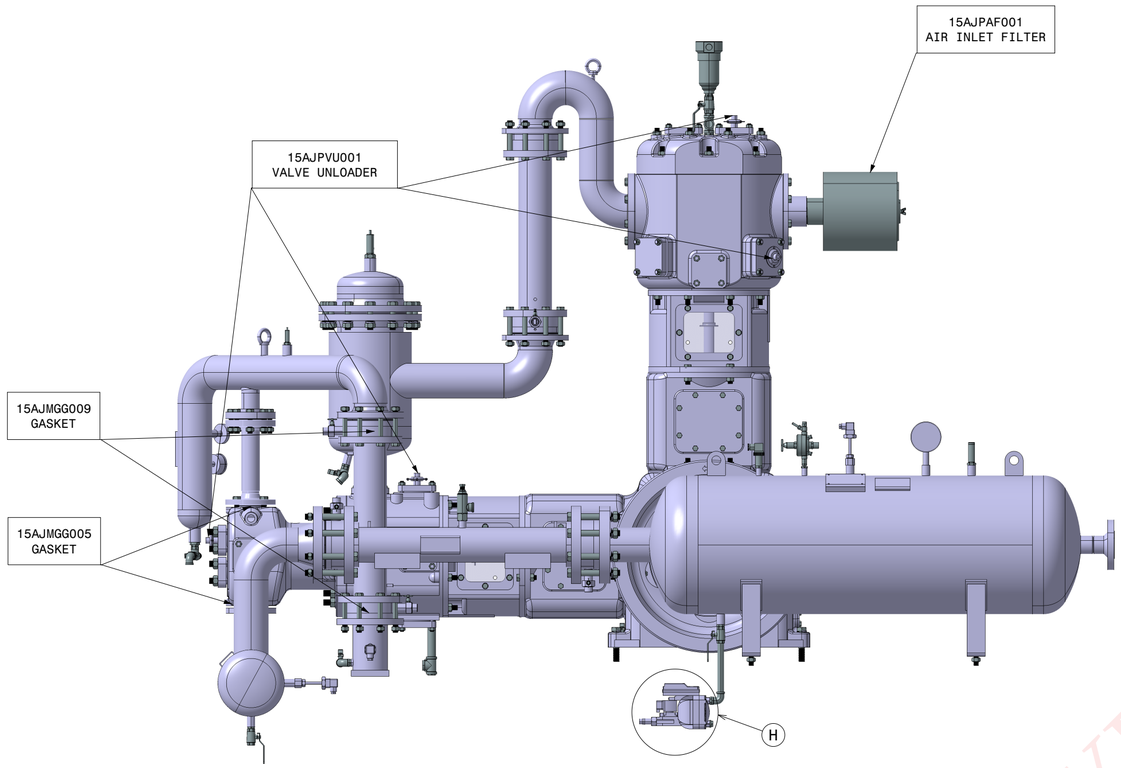


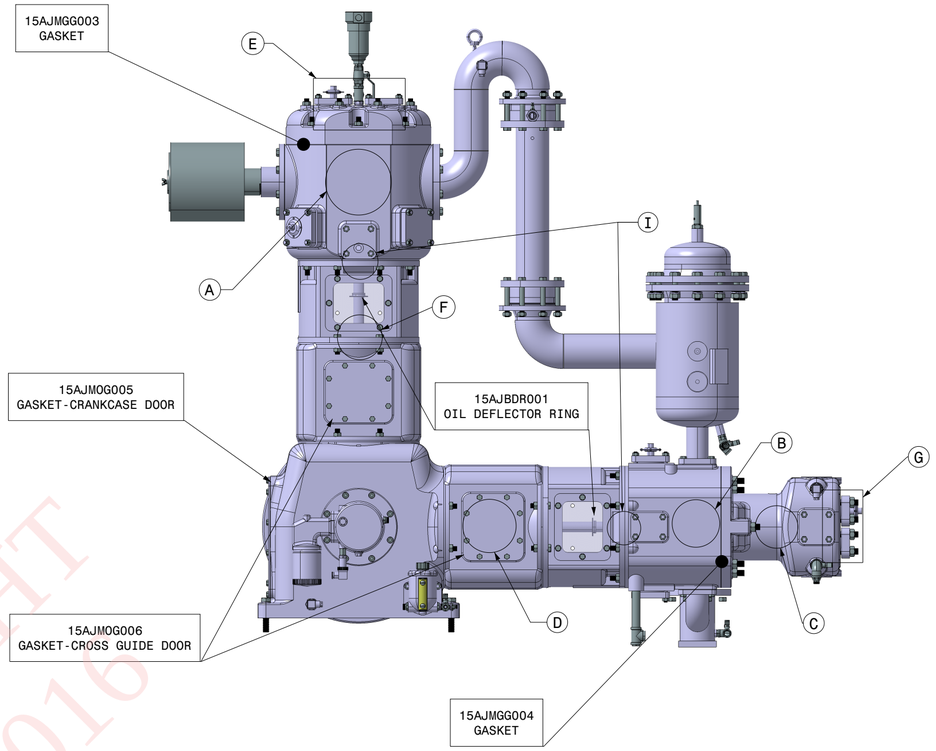


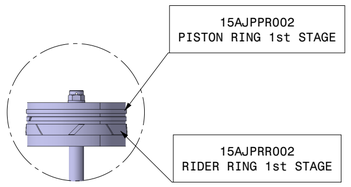


DETAIL A

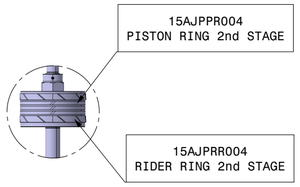


DETAIL B

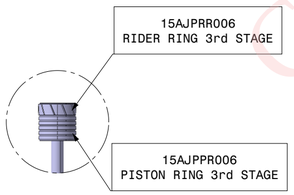


DETAIL C

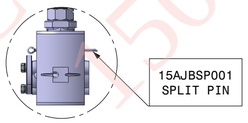


DETAIL D

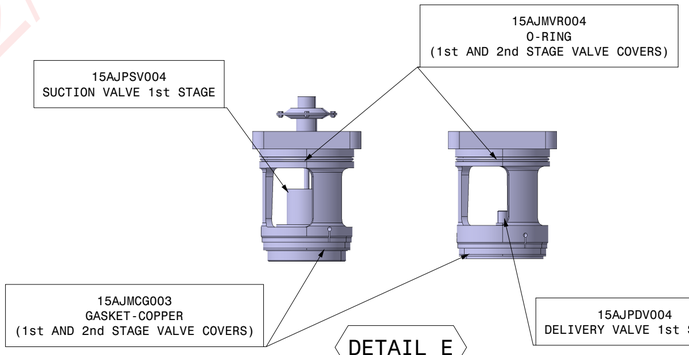


DETAIL E

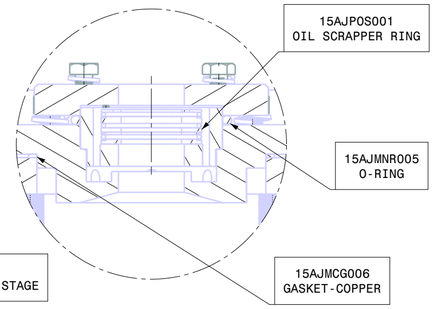


DETAIL F

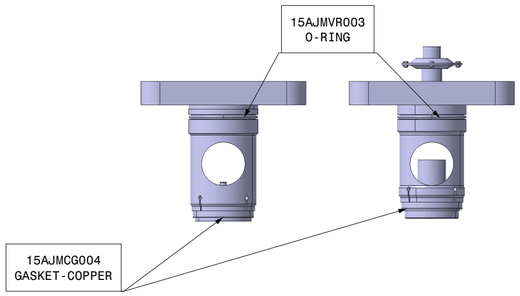


DETAIL G

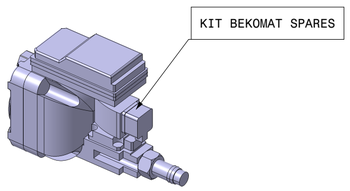


DETAIL H

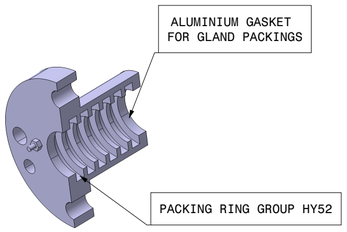


DETAIL I

COPYRIGHT
15042/2016

© COPYRIGHT 15042/2016

**AJ COMPRESSORS LLP.**

DRAWING TITLE

2nd NECESSITY LAYOUT AJ11(8000 hrs HP+LP)